TOPLINE KITCHEN RANGE HOOD
MODEL NO : TL78730"II W/Hs

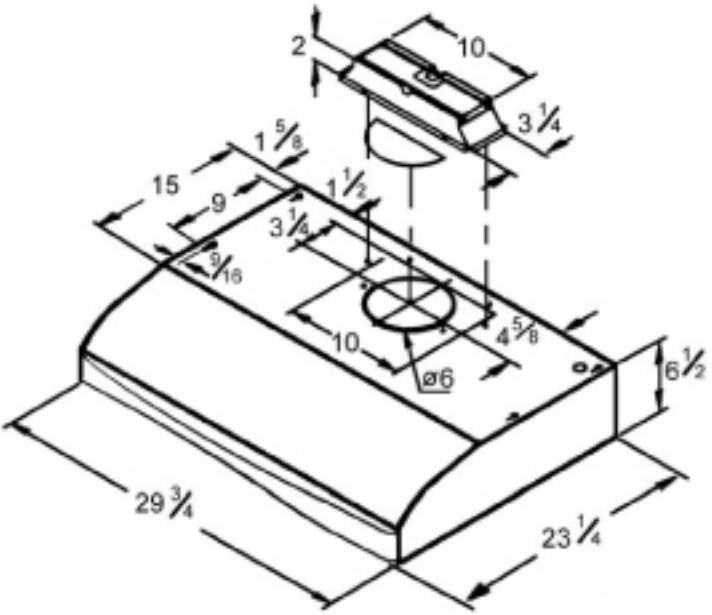

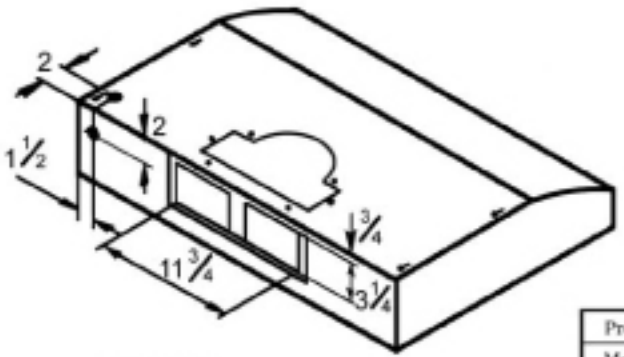

Unit : inch

Product	Sakura Rangehood
Model No	TL78730 A/W/S
Last Revised	Mar, 11, 2004

Drawing No: TL78730.jpg

Note: All dimensions shown on this drawing is for reference only, Oshawa reserve the right to make modification and/or improvement withour prior notice.